AGENDA
REGULAR COUNCIL MEETING
VILLAGE OF BEISEKER
August 10, 2026
700 1st Avenue, Beiseker AB T0M 0G0 and Online

1. Call to Order

2. Declarations of Pecuniary or Indirect Pecuniary Interest

3. Adoption of Agenda

4. Adoption of Previous Minutes
a) Minutes of the July 13, 2026 Regular Council Meeting
b) Minutes of the July 13, 2026 Public Hearing Land Use Bylaw Amendment

5. Delegation
a) Les Spurgeon – Beiseker Parks & Trails Society

6. Staff Reports
a) Public Works Department – Written Report
b) CAO Report – Written Report
c) Fire Department – N/A

7. Financial Reports / Budgets
a) Cheque Listing – August 7, 2026

8. Business Arising From Minutes (Old Business)
a) Policy FD-01 Paid-On-Call Firefighter Response Compensation

9. New Business
a) MDP Review Terms of Reference, Communications & Engagement Plan – Palliser via Zoom
b) CN Rail Property
c) Atco Notification
d) Call to Action – Government of Alberta
e) Letter from Corwin Skuce regarding Vacant Land Tax
f) Councillor Accountability Framework Feedback
g) RVC Proposed Land Use Changes
h) Potential Meeting with Honorable Devin Dreeshan, Minister of Transportation & Economic Corridors

10. Council Reports
a) Mayor David Ledoyen
b) Deputy Mayor David McKenzie
c) Councillor Nikki King
d) Councillor Austin Sheridan
e) Councillor Neil Young

11. Closed Session
a) Governance Instruments (Personnel / Advice from Officials – MGA s.197; ATIA/POPA)

12. Adjourment

4.a.

MINUTES OF THE REGULAR MEETING OF COUNCIL
VILLAGE OF BEISEKER
HELD ON JULY 13, 2026
At 7:00 pm Online and 700 1st Avenue, Beiseker AB T0M 0G0

PRESENT

Mayor David Ledoyen
Deputy Mayor David McKenzie
Councillor Nikki King
Councillor Neil Young
CAO Gail Peckham
Councillor Austin Sheridan

1. **Call to Order**
   Mayor Ledoyen called the meeting to order at 7:05 pm.

   Treaty 7 Acknowledgement

2. **Declaration of Pecuniary or Indirect Pecuniary Interest**
   N/A

3. **Agenda**

Res#2026-336 Deputy Mayor McKenzie made motion to approve the Agenda for the July 13, 2026 Regular Council Meeting.

CARRIED

4. **Adoption of the Previous Minutes**

Res#2026-337 Councillor Young made motion to approve the minutes of the June 22, 2026 Regular Council Meeting.

CARRIED

5. **Delegation – RCMP Sgt. Patey**
   Sgt. Patey presented the quarterly RCMP report for Beiseker and the surrounding area. The presentation highlighted ongoing crime reduction initiatives, including a crime reduction blitz conducted near Balzac, rural crime prevention efforts, community engagement activities at the local school, road safety initiatives, and seniors' fraud awareness education. Sgt. Patey also advised that there are currently no vacancies at the Beiseker RCMP Detachment. During the reporting period, the detachment responded to 59 service calls in Quarter 4 and 94 service calls in Quarter 1. Calls for service included assaults, criminal harassment, domestic incidents, forcible confinement, registry fraud, impaired driving, mental health-related occurrences, theft, traffic collisions, speeding, sexual assault, and suspicious vehicles.

6. **Staff Reports**
   a) Public Works – Written Report
   b) CAO – Written Report
   c) Fire Dept – Verbal Report

Res#2026-338 Councillor Young made motion to accept the staff reports as presented. CARRIED

7. **Financial Reports**

a) Cheque Listing to July 9, 2026

Res#2026-339 Councillor King made motion to approve the Cheque Listing dated July 9, 2026 as presented.
CARRIED

b) Loan Payouts and Pre-payments 2026

Res#2026-340 Councillor Young made motion to accept the Loan Payouts and Pre-payments 2026 as information.
CARRIED

8. **Business Arising from Minutes (Old Business)**

a) Bylaw 2026-16 to Amend Land Use Bylaw 2019-04

Res#2026-341 Mayor Ledoyen made motion to give Bylaw 2026-16 to Amend Land Use Bylaw 2019-04 Second Reading.
CARRIED

Res#2026-342 Deputy Mayor McKenzie made motion to take Bylaw 2026-16 to Amend Land Use Bylaw 2019-04 to Third and Final Reading.
CARRIED

b) Council Procedural Bylaw 2026-17 to Amend Bylaw 2024-13

Res#2026-343 Councillor Young made motion to take Council Procedural Bylaw 2026-17 to Amend Bylaw 2024-13 to Third and Final Reading.
3 in favour, 2 against
CARRIED

c) RCMP Communities Priorities Plan

Res#2026-344 Councillor Young moved that Council recommend to the RCMP the following Community Priorities Plan for the Village of Beiseker:
- Community engagement through attendance at school functions, Seniors' Centre, including presentations on fraud awareness; Participation in "Coffee with Council" events to provide opportunities for residents to ask questions and engage with the RCMP;
- Increased traffic enforcement and control along Highway 72;
-Regular RCMP news releases for publication on the Village's social media platforms and in the community newsletter.

CARRIED

9. **New Business**

a) Understanding The Vexatious Complaints Policy

Res#2026-345 Mayor Ledoyen made motion to accept the report as information.
CARRIED

b) Policy M-42 Vexatious Complaints

Res#2026-346 Mayor Ledoyen made motion to approve and pass Policy M-42 Vexatious Complaints.
CARRIED

c) Summary of Revisions Policy M-42

Res#2026-347 Mayor Ledoyen made motion to accept as information.
CARRIED

d) Beiseker Lions Club Thank You Letter

Res#2026-348 Councillor Sheridan made motion to accept as information.
CARRIED

e) 2026 Funding Allocations

Res#2026-349 Councillor King made motion to accept as information.
CARRIED

f) MGA Change Summary – Bill 28

Res#2026-350 Councillor Sheridan made motion to accept as information.
CARRIED

g) 2026 Alberta Municipalities Convention

Res#2026-351 Councillor Young made motion to accept as information. Councillor Young and Councillor Sheridan will be attending Convention in Edmonton September 23rd – 25th.

CARRIED

h) Meeting with Municipal Affairs 2026 Convention

Res#2026-352 Councillor Young made motion for Administration to submit a meeting request with Honorable Dan Williams, Minister of Municipal Affairs, at 2026 Convention to discuss: Aging infrastructure grant funding; Longterm viability framework funding; Volunteer capacity of Council in small communities.

CARRIED

10. Council Reports

a) **Mayor Ledoyen** – Written Report
b) **Deputy Mayor McKenzie** – N/A
c) **Councillor King** – Verbal Report
d) **Councillor Sheridan** – Verbal Report
e) **Councillor Young** – Verbal Report

Res#2026-353 Councillor King made motion to accept the Council Reports as presented.

CARRIED

11. Closed Session

N/A

12. Adjournment

Deputy Mayor McKenzie adjourned the meeting at 8:20 pm.

_____

Mayor, David Ledoyen

_____

CAO, Gail Peckham

4.b.

MINUTES OF THE PUBLIC HEARING - LAND USE BYLAW AMENDMENT
VILLAGE OF BEISEKER
HELD ON JULY 13, 2026
At 7:00 pm Online and 700 1st Avenue, Beiseker AB T0M 0G0

1. **Call to Order**
   Mayor Ledoyen called the Public Hearing to order at 7:00 pm.

2. **Introduction and Rules of Conduct**
   Mayor Ledoyen provided the rules of the Public Hearing and introduced Planner, Zacharie Forest – Palliser Regional Municipal Services. The applicants, Sergey and Victoria Rozenberg, were unable to attend the hearing.

3. **Palliser Regional Municipal Services Briefing**
   Zacharie Forest explained that the proposed amendment is to re-designate 2.023 ha (5.00 ac) portion of the SW ¼ Section 12-28-26 -W4M from Urban Reserve (UR) District to General Industrial (M1) District.

4. **Public Submissions**
   There were no public submissions received.

5. **Written Submissions**
   There were no written submissions received.

6. **Closing Comments from Pallier Regional Municipal Services**
   The proposed Land Use amendment complies with the policies of the Village of Beiseker Municipal Development Plan Bylaw within the area designated future General Industrial and Highway Commercial development, and does not conflict with the policies of the Skyland Area Structure Plan. The recommendation to Council is to give proposed Bylaw 2026-16 second, third and final reading.

7. **Council Questions**
   There were no questions from Council.

8. **Closure of Public Hearing**
   Mayor Ledoyen declared the Public Hearing closed at 7:04 pm.

9. **Adjournment**
   Adjourned at 7:04 pm.

August 4, 2026 5.a.

Village of Beiseker Council & Admin.

I'm Les Spurgeon,
President of Beiseker Parks &Trails Society (BP&TS)

I'm here to ask for your support in creating our community Pump Track, planned to be located on the SW corner of Friendship Park. This site and project was proposed to the previous Council, and strongly supported. While the project has been on hold for the past 8 months, we have been gathering information, possible contractors and design, to plan this community asset.

Today, Josh Rance and myself, met on site and via Zoom, with Hoots, an Alberta Co., who are experts in pump track design and creation. They are providing start up costs and preliminary design, based on a $50 K grant application. Initially, a dirt/clay design, with a paved option, and expanded site option as well. Actual Design and costing estimate is: $2500-3000.

We also have a European Company, Velosolutions, which provided their information and possible designs and costs, from their website, starting $230 K and up.

We have a third contact, but we are unable to meet with them until late August.

And of course, we will give TTR Contracting the opportunity to bid, once we have a design option.

All bids will incorporate a local procurement option.

The site previously discussed, and approved, is in Friendship Park. It is 30 m. x 40 m., on the NW corner of the Arena, with a 5 m. buffer between. Locates were previously done with no Utilities on site, as power poles are in the 5 m. buffer. There is also room to expand another 20 m., or more, to the East.
Further, with this proposed project, the old Skateboard Park, adjacent to the Community Hall, could be the transformed into potential Pickle Ball court(s).

I am asking Council for 2 motions today:

1. To formally approve the site, so we can move forward with the Grant application which is due by the end of August

2. To provide $3000, for design and costs, so that we can complete the Grant application (these funds will be reimbursed upon success of funding or fundraising if needed).

If successful BP&TS could possibly start the project fall of 2026, but more likely, the spring of 2027.

Thank you for your time and consideration in this Community project.

Warm regards,

Les Spurgeon, President
Beiseker Parks & Trails Society (BP&TS)
Box 424, Beiseker, Ab. T0M 0G0
403-852-1270
ljspur@gmail.com

6.a.

VILLAGE OF BEISEKER

PUBLIC WORKS

PO BOX 349, BEISEKER, AB T0M 0G0 Email: publicworks@beiseker.com
Tel. 403-947-3270 Fax 403-947-2146 www.beiseker.com

Council Report: Regular Meeting of Council – August 10, 2026
Prepared by: Brandon Martin

Water/Wastewater:

- A new electrical panel was installed at the well that fills Reservoir 1 (fill station) along with new wiring between the building and well. This is the result of a short between the building and the well and extensive damage to the panel from mice.
- Administration has advised me of Council's concerns over trends of higher water usage this year. There are a few reasons for this:
  - On July 13, it was brought to our attention that one of the toilets at the Centennial Washrooms was constantly flushing. This has since been repaired.
  - On July 14, a leak was discovered in a home's crawlspace from the meter. This leak was repaired but appears to have been leaking for some time.
  - On July 16, we discovered the toilet in the hall kitchen was running. This has since been repaired.
  - In January and May there were water breaks.
  - There have been additional homes built in The Junction, which would increase water usage.
  - We believe we have another leak and are attempting to locate it.
- Annual cleaning of the main lift station and the storm lift station were completed the week of August 03.

Roads and Sidewalks:

- This year's road paving has been completed and the area at the arena to be paved is being prepped for paving.

Beiseker Daily Average Water Usage Consumption by Year and Month (m^3)

	2020	2021	2022	2023	2024	2025	2026
January	158.61	134.32	150.55	169.00	194.23	149.19	**214.84**
February	162.48	172.68	167.18	**178.79**	160.59	155.18	155.04
March	144.52	139.45	155.90	**190.00**	135.74	145.97	155.94
April	145.07	138.47	162.20	**175.73**	138.83	161.47	163.30
May	160.87	141.58	150.68	155.90	143.94	164.19	**187.39**
June	144.43	186.90	156.53	165.07	175.50	184.33	**193.40**
July	147.06	199.71	162.42	170.58	185.58	166.03	**228.23**
August	177.81	179.68	181.39	172.32	**201.23**	183.68	
September	153.47	**204.23**	184.83	160.47	156.40	181.43	
October	146.00	157.32	158.48	151.90	**186.84**	170.16	
November	138.53	149.23	158.70	141.77	153.70	**161.83**	
December	134.94	**166.84**	163.45	155.26	149.06	156.81	
Average	151.15	164.20	162.69	165.57	165.14	165.02	185.45

Highest Water Consumption by Month

Highest Water Consumption of All

Lowest Water Consumption by Month

Lowest Water Consumption of All

Monthly Total Water Usage (m^3)

	2022	2023	2024	2025	2026
January	4767	5238	6021	4625	6660
February	4681	5006	4657	4345	4341
March	4733	5890	4208	4525	4834
April	4766	5272	4165	4844	4899
May	4771	4833	4462	5090	5809
June	4696	4952	5265	5530	5802
July	5051	5288	5753	5147	7075
August	5646	5342	6238	5964	
September	5545	4814	4692	5443	
October	4913	4709	5792	5275	
November	4781	4253	4611	4855	
December	5067	4813	4621	4861	

TOTALS	**59417**	**60410**	**60485**	**60504**	**39420**

6.D.

CAO REPORT – August 10, 2026

Campground
I met with the Campground Managers and Councillor Sheridan on July 14, 2026, to review the Request for Tender for the Campground Manager position and discuss the tender requirements. To date, we have received 3 proposals for the Campground Manager position. The RFT closes August 28th.

We reviewed different areas of the campground that require maintenance and attention and discussed operational priorities to improve the overall condition and functionality of the campground.

Assistant CAO Recruitment
Administration conducted eight interviews for the Assistant CAO position. We received many strong applications and were pleased with the high caliber of candidates.

Following the interview process, Administration is pleased to announce the hiring of **Norma Lang** as the Village's new Assistant CAO. Norma brings extensive municipal government experience and a wealth of knowledge that will be a valuable asset to the organization.

Norma commenced her employment with the Village on August 4, 2026, and Administration looks forward to having her support Council, staff, and the community in her new role.

Planning
I met with representatives from Palliser and MPE on July 22nd to discuss the proposed industrial subdivision, review the Municipal Development Plan (MDP), and discuss the development of a Communications and Public Engagement Plan for the Village of Beiseker.

Economic Development Committee Meeting
I attended the Economic Development Committee meeting on July 22, 2026. Committee discussions focused on initiatives to attract new businesses and investment to Beiseker. Updates were provided on the airport and ongoing opportunities to support economic growth. The Committee also discussed available lands within the Village that may be suitable for future commercial and industrial development. Administration is developing a Beiseker Economic Development Scorecard to track and report key indicators, including business licence activity, development permit applications, building permit activity, and other economic development metrics. This scorecard will provide measurable information to monitor growth and assist in future planning and decision-making.

Insurance and Risk Services Mid-Year Review
Norma Lang and I met with the regional manager and the insurance / risk advisor from Alberta Municipalities Insurance on August 5th.

The pre-renewal agenda with the insurance reps covered changes to communication flows, insurance trends, and consideration for additional risk services including Owner Controlled Insurance Program, Cyber Security add on policy, a special events risk flowchart, and the

availability of legal advice from their legal team which is available to Beiseker before potential claim action.

Discussion items included follow up to the Risk Control Inspection completed on nine Village buildings in 2023 that resulted in eleven recommendations to mitigate risk. AB MUNIS Insurance acknowledged that all recommendations have now been implemented by the Village. Information was shared by the insurance company about large risk trends with fires, water, cyber security, and special events coverage. The status of all four 2026 claims made by the Village in 2026 was reviewed.

Going forward this Fall, an Insurance Statement of Values and Pre-renewal Questionnaire will be sent outlining all buildings, contents, and equipment insured on the policy for our review and updating. We also requested more information about coverage options for potential stand-alone Cybersecurity policy.

Insurance Claim Update
The Village of Beiseker has received formal notification from its insurance adjusters regarding a property damage claim submitted against the municipality.

Following a thorough investigation, the insurance adjusters determined that the Village of Beiseker was **not negligent** and bore **no liability** for the alleged damages. As a result, the Village's insurer has denied the claim in its entirety, confirming that the municipality is not at fault and that no compensation will be provided under the claim.

Village Of Beiseker

Cheque Listing For Council

7.a

2026-Aug-7
11:42:21AM

Cheque #	Cheque Date	Vendor Name	Invoice #	Invoice Description	Invoice Amount	Cheque Amount
20260332	2026-07-13	THE BEISEKER PARKS & TRAILS SOCIETY	JULY 13 2026	FORTIS GRANT FOR PARKS & TF	7,058.00	7,058.00
20260333	2026-07-28	LAMBERT, AMANDA	20260728	COMMUNITY CENTRE CARETAK	696.00	696.00
20260334	2026-07-28	NEMETH, ALBERT	20260728	CONTRACTED SERVICES MOWII	150.00	753.50
20260334			20260731	FLOWER MAINTENANCE	603.50	
20260335	2026-07-28	PECKHAM, GAIL	20260731	OFFICE CARETAKER	250.00	250.00
20260336	2026-08-10	ACME FARM & BUILDING CENTRE	2607-027900	SHOP SUPPLIES	52.49	250.73
20260336			2607-028594	SHOP SUPPLIES	19.94	
20260336			2607-029490	SHOP SUPPLIES	87.64	
20260336			2607-029523	SHOP SUPPLIES	79.78	
20260336			2607-029528	SHOP SUPPLIES	10.88	
20260337	2026-08-10	ALBERTA MUNICIPALITIES	1777-2026-08	AUGUST BENEFITS	5,722.28	5,722.28
20260338	2026-08-10	AMSC ENERGY	41082	JUNE GAS & POWER	15,334.84	15,334.84
20260339	2026-08-10	BEISEKER PHARMACY	INVOICE	04-30-26 TO 07-22-26	15.96	15.96
20260340	2026-08-10	CINTAS	4267768770	SUPPLIES FOR 04-07/2026	1,745.71	1,745.71
20260341	2026-08-10	COAST TO COAST MECHANICAL CONTRACTC	3122	CENNTENIAL PARK R/M	516.10	1,363.98
20260341			3124	CAMPGROUND R/M	847.88	
20260342	2026-08-10	DR HYDROVAC	17716	HYDROVAC	1,420.13	1,420.13
20260343	2026-08-10	GREENTECH ENVIRONMENTAL	12979	WEED CONTROL	3,755.18	3,755.18
20260344	2026-08-10	GREGG DISTRIBUTORS (CALGARY) LTD.	069-908472	SHOP SUPPLIES	150.86	804.59
20260344			069-913619	EQUIPMENT R/M	309.77	
20260344			0699139013	SHOP SUPPLIES	307.73	
20260344			069-919014	SHOP SUPPLIES	36.23	
20260345	2026-08-10	HRYNIUK , LYNDA	INVOICE	PAPER TOWEL DISPENSER	84.42	84.42
20260346	2026-08-10	KNIBB DEVELOPMENTS LTD.	11943	LIFT STATION	1,335.60	2,150.40
20260346			11944	RES #1	814.80	
20260347	2026-08-10	LINDE CANADA INC	58220348	CYLINDER	194.88	194.88
20260348	2026-08-10	MCNAIR SAND & GRAVEL LTD	74700	GRAVEL	671.98	671.98
20260349	2026-08-10	MPE A DIVISION OF ENGLOBE	00001312	GRASSLANDS SUBDIVISION	1,884.23	3,689.18
20260349			00001314	ENGINEERING	1,804.95	
20260350	2026-08-10	NAPA AUTO PARTS ACME	677-407568	EQUIPMENT	4.63	4.63
20260351	2026-08-10	OAKCREEK GOLF & TURF LP.	1102357-00	TIRE 4-PLY	506.37	506.37
20260352	2026-08-10	PATTERSON , LYNN	1	SHOP SUPPLIES	52.49	52.49
20260353	2026-08-10	PITNEY BOWES LEASING	3202801422	LEASE	219.84	219.84
20260354	2026-08-10	PRO TECH FIRE & SAFETY INC.	P081196	RR130 MAINTENANCE	4,425.56	4,425.56
20260355	2026-08-10	RED LINE TRUCK 'N' TRAILER	186343	TIRE REPAIR	46.91	142.74
20260355			186344	TIRE REPAIR	95.83	
20260356	2026-08-10	SUPERIOR SAFETY CODES INC.	22591	ELECTRICAL PERMITS	88.20	88.20
20260357	2026-08-10	TELUS COMMUNICATIONS INC.	24150999	JULY LANDLINES/INTERNET	1,054.47	1,054.47
20260358	2026-08-10	TELUS MOBILITY INC.	38821221	JULY MOBILITY	533.91	963.89
20260358			38821222	JULY LANDLINES	429.98	
20260359	2026-08-10	TRACTORLAND KUBOTA (CALGARY)	3495101	EQUIPMENT	867.72	913.84
20260359			P3504901	EQUIPMENT	2.93	
20260359			P93496901	EQUIPMENT	43.19	
20260360	2026-08-10	UNITED FARMERS OF ALBERTA COOP	1403518-07	FUEL FOR JULY	1,611.74	1,611.74
20260361	2026-08-10	WILD ROSE ASSESSMENT SERVICES	10279	INSURANCE	1,115.63	1,115.63

Village Of Beiseker

Cheque Listing For Council

2026-Aug-7
11:42:21AM

Cheque #	Cheque Date	Vendor Name	Invoice #	Invoice Description	Invoice Amount	Cheque Amount
20260362	2026-08-10	WORKERS COMPENSATION BOARD	29164471	JULY WCB PAYMENT	1,500.00	1,500.00
20260363	2026-08-10	2668413 ALBERTA LTD.	INVOICE	SHOP SUPPLIES/SOCIAL FUND	289.58	289.58
20260364	2026-08-10	A TO Z PROMOTIONS	1729	BEISEKER CAPS	231.00	231.00
20260365	2026-08-10	AVALANCHE WASTE MANAGEMENT	14804	FURNITURE	1,772.53	4,063.20
20260365			15326	GENERAL C & D	1,151.73	
20260365			15352	GENERAL C&D	1,138.94	
20260366	2026-08-10	AVTEC RESOURCE PROTECTION LTD.	1013-1016	CONTRACTING SERVICES	23,016.02	23,016.02
20260367	2026-08-10	CARLEY, ELAINE	INVOICE	CASUAL HELP	210.00	210.00
20260368	2026-08-10	ENVIRONMENTAL 360 SOLUTIONS	0000181897	AUG MONTHLY CHARGE	1,543.54	1,848.42
20260368			181897	AUG MONTHLY CHARGE	304.88	
20260369	2026-08-10	FIREGROUND APPAREL COMPANY	FG7119	STATION PATCHES	645.75	645.75
20260370	2026-08-10	G & D LIGHT HAUL LTD	2026-0722	COURIER SERVICES	39.38	196.90
20260370			2026-0798	BACTI SAMPLES & COURIER	157.52	
20260371	2026-08-10	GREAT WEST MEDIA	GWM635632	CAMPGROUND AD	139.10	139.10
20260372	2026-08-10	HORIZON TECHNOLOGY SERVICES	1136-1	MONITOR UPGRADE	420.00	2,458.94
20260372			1137	INSTALLATION	609.00	
20260372			1144-1	SEPTEMBER SUBSCRIPTION	379.94	
20260372			1145	IT SUPPORT SERVICES JULY	1,050.00	
20260373	2026-08-10	KEHLER, BRITTANY	INVOICE	FCSS SUPPLIES - MOVIE NIGHT	56.00	56.00
20260374	2026-08-10	LASHER ELECTRIC LTD.	466	WELL ELECTRICAL PANEL	3,192.64	3,192.64
20260375	2026-08-10	LEARN EXPERIENCE CONTRIBUTE INC	60	TRAINING	189.00	189.00
20260376	2026-08-10	MILLER WATER SYSTEMS	1173	WATER R/M	621.13	621.13
20260377	2026-08-10	NORTHWEST EQUIPMENT LTD.	0013459	SMALL EQUIPMNET	734.69	734.69
20260378	2026-08-10	RAM ELECTRIC & INSTR. LTD, O/A RAM ALARM	3591439	JULY MONTHLY MONITORING	246.50	493.00
20260378			3591963	AUGUST MONITORING	246.50	
20260379	2026-08-10	TTR CONTRACTING	1165	PAVING & EXCAVATING	661.50	36,283.91
20260379			1168	ROAD R/M	8,452.50	
20260379			1169	ROAD MAINTAINANCE	27,169.91	

Total 133,230.44

*** End of Report ***

8.a.

VILLAGE OF BEISEKER
Policy No. FD – 01
PAID-ON-CALL FIREFIGHTER RESPONSE COMPENSATION POLICY

Purpose

The purpose of this policy is to establish a fair and consistent compensation program for Paid-On-Call Fire Department members who respond to emergency incidents on behalf of the Village of Beiseker.

Policy Statement

The Village of Beiseker recognizes the valuable service provided by its Paid-On-Call Fire Department members and will compensate eligible members for responding to emergency incidents in accordance with this policy.

Scope

This policy applies to all Paid-On-Call members of the Village of Beiseker Fire Department, excluding the Fire Chief and Deputy Fire Chief.

Policy

1. Effective upon Council approval of this policy, Paid-On-Call Fire Department members shall be compensated at a rate of **$25.00 per hour** for attending emergency response calls.
2. Compensation shall be paid for responding to:
    - Fire calls within the Village of Beiseker;
    - Fire calls outside the Village under mutual aid, automatic aid, or other authorized response agreements;
    - Medical first response calls within the Village; and
    - Medical first response calls outside the Village under mutual aid, automatic aid, or other authorized response agreements.
3. Firefighters must:
    - Be an active member in good standing with the Beiseker Fire Department;
    - Respond to the dispatched emergency;
    - Participate in the emergency response; and
    - Be recorded on the official incident attendance sheet or electronic reporting system.
4. Compensation shall begin when the member reports to the fire hall or designated response location following dispatch and shall conclude when the member is released from the incident and has returned to the fire hall, where applicable.
5. Time shall be recorded in fifteen (15) minute increments.
6. The Fire Chief or designate shall verify all attendance records and submit approved response hours to Administration for payroll processing.

7. The Fire Chief and Deputy Fire Chief are excluded from this policy and shall be compensated in accordance with their respective employment or remuneration agreements.
8. Funding for firefighter response compensation shall be provided through the annual Fire Department operating budget as approved by Council.

Reporting

The Fire Chief shall provide Council with an annual report identifying:

- The total number of emergency responses during the preceding calendar year;
- The number of in-village fire calls;
- The number of out-of-town fire calls;
- The number of in-village medical calls;
- The number of out-of-town medical calls;
- Total firefighter response hours; and
- The total annual cost of firefighter response compensation.

Responsibility

The Fire Chief shall be responsible for administering this policy and ensuring compliance with its provisions.

Approved by Council: _____

Resolution No.: _____

Effective Date: _____

Review Date: _____

Mayor David Ledoyen

Chief Administrative Officer Gail Peckham

Village of Beiseker
Request For Decision

9a

Date: August 10, 2026 **Council Agenda #:**
Title: Municipal Development Plan Review Terms of Reference

Recommended Motion

That Council direct Administration to work with Palliser Regional Municipal Services (PRMS) to replace the Beiseker Municipal Development Plan Bylaw 02-2013 in accordance with the scope and timelines outlined in the attached Terms of Reference and Communications and Engagement Plan.

Background

Palliser Regional Municipal Services provides planning services to its member municipalities, including larger planning projects such as updating or replacing planning documents on a rotational basis. The Village of Beiseker has been identified as a project for completion by 2027. The Municipal Development Plan was prepared and adopted in 2013 and is in need of review and replacement.

Prior to commencing the projects, PRMS seeks to review the Terms of Reference and Communication and Engagement Plan to ensure that the process and scope of the project are understood and agreed upon.

Communications

The project is proposed to be communicated as indicated in the Communication and Engagement Plan.

Financial Implications

The project is included in the annual requisition paid to PRMS. Additional fees that the Village may incur are publishing newspaper advertisements to advertise the public hearing, or newsletters in the mail.

Policy and/or Legislative Implications

The contents and approval process of preparing a new MDP are outlined in the *Municipal Government Act*, 632 and 636.

Recommended Motions and Alternatives

That Council direct Administration to work with Palliser Regional Municipal Services (PRMS) to replace the Beiseker Municipal Development Plan Bylaw 02-2013 in accordance with the scope and timelines outlined in the attached Terms of Reference and Communications and Engagement Plan.

Attachments

1. Terms of Reference
2. Communications and Engagement Plan

Reviewed and Approved for Submission to Council

Submitted By: Tracy Woitenko, Senior Planner, PRMS

Reviewed By: **Gail Peckham**

Terms of Reference

Village of Beiseker
Municipal Development Plan
Review and Update
2026-2027

1. Authority

Section 632(1) of the Municipal Government Act (MGA) requires a municipality to prepare and adopt a Municipal Development Plan (MDP) to guide the long-term use and development of land within the municipality. The MDP is a visionary document, with a long-term focus. The MDP creates the framework for regulations in the Land Use Bylaw (LUB) and other municipal documents related to planning and engineering. As a statutory plan, the municipality is required to follow its policy statements in the MDP when making any planning and development decisions. The LUB is important for development authorities to make decisions on development permits and subdivision applications on a day-to-day basis. Section 640(1) of the MGA requires a municipality to adopt a Land Use Bylaw.

It is important for municipalities to ensure that the MDP and LUB are reviewed and updated regularly to remain current. As MDP goals and objectives are achieved, or when the direction or framework of planning principles change, municipalities should revise their MDPs to ensure alignment, clarity, and effective implementation. To ensure consistency, the LUB is generally updated following or concurrent with the adoption of a new MDP.

The authority of a municipal Council to adopt, amend, or repeal an MDP or LUB is established in the MGA, specifically sections 191 and 632. Section 191 also provides Council with the authority to amend or repeal a bylaw when deemed necessary to reflect changing community needs, updated technical information, or shifting municipal priorities.

This Terms of Reference not only defines the process for preparing the new MDP and the anticipated outcome, but it also outlines how the Village and PRMS will work together.

2. Background

The Village of Beiseker adopted its current Municipal Development Plan Bylaw 02-2013 in 2013. The MDP Part C Implementation states that the MDP should be reviewed on a periodic basis to ensure that its objective and policies reflect the current desires of Council regarding the growth of Beiseker. In addition, Municipal Affairs reviewed the Village's MDP and indicated that it was deficient in meeting the MGA, specifically statements regarding agriculture.

The Village's Land Use Bylaw 2019-04 (LUB) was adopted in 2019 and is more current. A review of the LUB will commence following the adoption of the new MDP.

3. Purpose of Project

The purpose of this project is to review and replace the Village of Beiseker MDP. This will include work towards replacing the Beiseker MDP to ensure it is visionary, goal and objective-oriented that encourages development that meets the Village's needs. The MDP will also be updated to meet the requirements of the MGA.

4. Project Team

The project will be led by Palliser Regional Municipal Services (PRMS) with assistance and direction from Village of Beiseker staff members.

PRMS		
Tracy Woitenko	Senior Planner	Planning/Project Lead
Elliot Hall	Geographic Information Systems Coordinator	Mapping and GIS
Village of Beiseker		
Gail Peckham	Chief Administrative Officer	Administration Lead

5. Roles and Responsibilities

A. PRMS

PRMS will be responsible for preparing all written materials, including draft plans and bylaws for review by Administration. PRMS will also prepare all materials for the open house/survey and bylaw approval processes. PRMS will prepare all maps and graphics.

B. Village Administration

The Village of Beiseker Administration will be responsible for providing direction to PRMS for all project-related items. The Administration will also review all documents and provide comments to PRMS, including all bylaws. The Village will be responsible for distributing or publishing all notices related to the project, including open houses and public hearings on the website, the newspaper and other applicable formats.

C. Village Council/MPC

The Village Council will be responsible for approval of all planning documents by bylaw. This includes three readings of a bylaw and a public hearing. The Municipal Planning Commission will also be included in reviewing and providing comments on drafts of the new MDP and LUB.

6. Stakeholders

Stakeholders will be involved at various stages throughout the MDP process. These stakeholders may include:

A. Adjacent Municipalities

Rockyview County will be consulted or circulated notices as required.

B. Beiseker Landowners, Residents and Business Owners

Landowners, residents and business owners in Beiseker will be invited to provide input throughout the MDP review process as outlined in the Communications & Engagement Plan. A formal public hearing will also be held prior to second reading to allow affected persons to have the opportunity to express their concerns to the Village Council.

C. Schools

The Rocky View School Division will be notified of the MDP review and will be encouraged to provide feedback to the Village.

7. Project Scope

The scope of the project will include:

A. Replacing the Municipal Development Plan with a focus on:
- Including relevant background information to provide context and to inform MDP policies
- ensuring the MDP is visionary and goal/objective oriented
- providing clarity and consistency of terminology
- deleting content that is better suited to the LUB, or is provincial legislation
- reviewing future land uses and the planning process
- updating information regarding infrastructure and future growth.

8. Timeline

Task		Anticipated Date
Terms of Reference Information/Adoption	Regular meeting of Council	August 10, 2026
Prepare MDP, review with Administration	Virtual meetings	August – November 2026
Presentation and Discussion: Draft MDP	Municipal Planning Commission Workshop	November – December 2026
Public engagement	Open House, surveys	December 2026 - January 2027
Bylaw approval process	Regular or Special meetings of Council	First reading in February/March 2027 Third reading by May 1, 2027

Communications & Engagement Plan

for the Beiseker MDP

July 2026

Prepared by:

Palliser Regional Municipal Services

Table of Contents

1.0	**INTRODUCTION**	**1**
1.1	PROJECT BACKGROUND	1
1.2	C&E PLAN PURPOSE	1
1.3	C&E GOALS	1
2.0	**THE C&E PLAN**	**2**
2.1	WHO WILL WE ENGAGE & HOW?	2
2.2	WHAT DOES 'REPRESENTATION' MEAN?	2
2.3	WHAT ENGAGEMENT ACTIVITIES WILL WE DO?	3
2.5	HOW DOES THE COMMUNITY COMMUNICATE?	4
2.6	HOW DO WE MEASURE SUCCESS?	4
2.7	PROJECT TEAM KEY CONTACTS AND INFORMATION	4

1.0 INTRODUCTION

1.1 PROJECT BACKGROUND

The Municipal Development Plan (MDP) guides long-range planning and land use in a municipality. The MDP establishes goals and objectives for development in the Village and includes policy statements for achieving them. It is intended to provide the framework within which the orderly, economical, and beneficial development and use of land can take place.

The current Beiseker MDP was prepared and adopted in 2013. Although there may be relevant goals, objectives and policy statements in the current MDP, PRMS is recommending that a new MDP is prepared to replace the current MDP. Planning bylaws, such as the MDP and the LUB are typically updated and/or replaced by a municipality every 5 to 10 years and is a best-practice of Alberta municipalities. It is important for municipalities to inform their residents, landowners and business owner that such projects are underway and that they will be provided opportunities to be engaged in the development of the new MDP and provide feedback once a draft document is prepared.

The MGA requires a public hearing to be held prior to second reading of an MDP bylaw. While this is only the minimum requirement, it is recommended that additional public engagement opportunities be provided prior to a bylaw being presented to Council for approval. This Public Participation Plan will provide the direction for how the public will be informed and engaged in the Beiseker MDP review and replacement project.

1.2 C&E PLAN PURPOSE

The purpose of this Communications and Engagement (C&E) Plan for the Beiseker MDP update is to outline the goals, stakeholders, approach, tactics, and events related to the communications and engagement aspects of the project.

1.3 C&E GOALS

The overall goals for the C&E aspects of the project are as follows:

- Build trust with the community and stakeholders
- Generate excitement and enthusiasm for the Beiseker LUB review project
- Provide opportunities for feedback and obtain representative feedback from the community
- Generate project awareness and education about best practices in community planning so citizens can provide meaningful and informed feedback
- Incorporate local knowledge into the LUB
- Ensure the feedback loop is closed by sharing back to the community what was heard.

2.0 THE C&E PLAN

2.1 WHO WILL WE ENGAGE & HOW?

The International Association of Public Participation (IAP2) has created a matrix that outlines a spectrum of public engagement. The IAP2 spectrum of engagement has been customized below for the Beiseker LUB.

	INFORM & CONSULT	LISTEN & LEARN	COLLABORATE	DECISION MAKERS
Stakeholders	***Tier 3:*** • Residents • Business owners	***Tier 2B:*** • Residents • Business owners	***Tier 2A:*** • Village Administration	***Tier 1:*** • Village Council
Overview	Obtain feedback to test ideas or concepts and clarify issues, identify possible solutions.	Create opportunities to enter into a dialogue to explore each other's perspectives, plans and concerns.	Collaborate, where possible, including alternatives and preferred solutions.	Final decision-making in the hands of those elected.
Example Tactics	**Website information, newspaper advertisements**	**Open house & surveys to obtain feedback on draft LUB**	**Online and in-person meetings, reviewing of draft documents**	**Public Hearing, Council meetings**
Promise	"We promise to inform the broader community through a variety of mediums and making all information about the project accessible."	"We promise that we will look to stakeholders for innovation, advice, guidance, and win-win solutions, and we promise to incorporate the outcomes of our collaborative efforts into the development of the MDP."	"We promise to work collaboratively with the Village Administration."	"We promise to inform Village Council of the engagement process and how local values and Village policy has been translated into the MDP."

2.2 WHAT DOES 'REPRESENTATION' MEAN?

One of the challenges of public engagement is to achieve 'representation' in the feedback received from the community during the project. To our team 'representation' means receiving feedback from a broad demographic of individuals and groups that generally represent the population at-large of the Village of Beiseker.

2.3 WHAT ENGAGEMENT ACTIVITIES WILL WE DO?

Below represents a proposed timeline and sequencing of engagement activities.

Date	Tactic (s)	Who's Responsible?
COMMUNICATIONS August 2026	**Post information on Beiseker website and social media of MDP project and proposed timelines**	- PRMS to provide information and images - Beiseker Administration to post
COMMUNICATIONS December 2026 / January 2027	**Post Draft MDP on Website**	- PRMS to provide draft MDP - Beiseker Administration to post on website and advertise on Village's social media accounts
ENGAGEMENT January 2027	**Survey and Open House**	- PRMS to prepare survey & open house materials - Beiseker Administration to post or distribute open house notices (newsletter)
COMMUNICATIONS February 2027	**What We Heard Report** - An official record of the comments and feedback provided. Provide to Council and post on website.	- PRMS to prepare report - Beiseker Administration to post on website
COMMUNICATIONS January/February 2027	**Public Hearing Notification** - Must be advertised in newspaper 2 consecutive weeks, post on website & social media	- PRMS to provide notification - Beiseker Administration to post notices
ENGAGEMENT March/April 2027	**Public Hearing** - Affected persons provided an opportunity to be heard by Council	- Council and Administration to hold public hearing - PRMS to listen to public feedback

2.5 HOW DOES THE COMMUNITY COMMUNICATE?

Every community is different and that includes how people communicate best and most efficiently. Today there are lots of different hard copy and online platforms for communication.

Preferred Communication Methods	
Village's Facebook	Village of Beiseker
Email & Print Newsletters	Monthly
Newspaper	Rocky View Weekly
Village Website	beiseker.com

2.6 HOW DO WE MEASURE SUCCESS?

The following parameters can be used to measure the success of the engagement process:

- Successful execution of engagement tactics and tools;
- Number of stakeholder connections and their active participation in the MDP;
- Positive/neutral/negative feedback from stakeholders; and
- Number of participants in open houses, workshops, and meetings.

2.7 PROJECT TEAM KEY CONTACTS AND INFORMATION

PROJECT TEAM PRIMARY CONTACT	
Name:	Tracy Woitenko, Senior Planner
Email:	twoitenko@palliserservices.ca
Phone:	587-570-8068

9. b

To: Mayor and Council From: Councillor Neil Young

Subject: Strategic Acquisition and Resale of Vacant CN Rail Property for Industrial Business Development

Executive Summary

Following a unanimous recommendation from the Economic Development Committee, the Village of Beiseker has a unique opportunity to drive economic growth by acquiring vacant land currently owned by Canadian National Railway (CN). By purchasing this underutilized asset in its current configuration and reselling it directly to local business owners, the Village can immediately address a severe regional shortage of industrial land, stimulate the local economy, and establish a permanent source of property tax revenue.

Market Context & Proven Demand

There is currently an urgent regional shortage of industrial space that Beiseker is perfectly positioned to capitalize on:

- **Regional Supply Shortage**: There are currently **no industrial lots for sale within a 35-kilometre radius** of Beiseker, whether serviced or unserviced. Local businesses looking to expand have nowhere to go.
- **The Irricana Precedent**: Neighboring Irricana recently approved the Pioneer Industrial Park, an 11-lot light-industrial subdivision. Despite only being **serviced with power** (relying on basic hauling and on-site holding tanks), the entire development **completely sold out during presales**.

This proves that industrial buyers do not require complex, expensive municipal water or sewer servicing to invest—they just need available land and electricity.

Strategic Benefits to the Village of Beiseker

- **Immediate Tax Base Expansion**: Keeping the land zoned for industrial use allows the village to target heavy equipment, storage, or manufacturing operations. This brings in higher non-residential tax brackets without putting stress on municipal water infrastructure.
- **Zero Costly Subdivisions or Rezoning**: By bypassing the lengthy municipal processes of rezoning or splitting the land into smaller parcels, the Village can execute a fast, low-overhead turnaround from acquisition to resale.
- **Job Creation and Resident Retention**: Expanding local industrial businesses provides employment opportunities right here in the village. This encourages younger families to stay in Beiseker rather than commuting to Calgary or Airdrie for work.
- **Beautification and Revitalization**: These vacant rail lands currently sit as unmaintained eyesores. Developing these lots improves Beiseker's streetscape, making the village more inviting to both residents and tourists travelling along Highway 9 and Highway 72.
- **Retaining Local Control**: By purchasing the land first, the Village retains 100% control over development conditions and final sale criteria. This ensures that the

property goes to local operators who support the community's long-term visual and financial goals.

Risk Management & Mitigation

- **Extended Holding Periods**: A primary risk of land acquisition is the potential for the municipality to hold the asset long-term if it fails to sell, tying up capital. However, with zero competing industrial inventory within 35 km and the rapid presale success in Irricana, demand heavily outweighs this risk, ensuring a swift turnaround.
- **Environmental Contamination**: Rail lands often raise environmental concerns. CN has formally confirmed that **there are no known contaminants** on this specific parcel. (Its only previous known use was agricultural)
- **Regulatory Protections (MGA)**: If any historically unknown contamination is discovered during development, the *Municipal Government Act* (MGA) of Alberta legally permits municipalities to sell potential brownfield properties. The MGA allows the Village to structure temporary tax exemptions to directly incentivize the buyer to clean up the site, removing any financial remediation burden from the municipality.
- **Bypassing Bank Assessments**: The intended target price point for this parcel will be accessible enough to allow local buyers to purchase the land cash-in-hand or through private financing. By avoiding traditional commercial bank loans, the transaction will bypass strict bank-mandated environmental site assessments (ESAs), preventing unnecessary bureaucratic delays.

Proposed Action Plan

[Phase 1: CN Inquiry] —> [Phase 2: Acquisition] —> [Phase 3: Direct Resale]

1. **Step 1: CN Contact & Identification**: Direct the administration to contact the CN Business Development and Real Estate Department to request a formal property assessment and confirm willingness to sell the specific parcel.
2. **Step 2: Acquisition**: Negotiate a purchase price with CN using municipal reserves or take out a temporary loan .
3. **Step 3: Direct Resale**: Market and sell the complete industrial parcel directly to local business owners looking for established industrial space, keeping the land in its current configuration.

Conclusion & Recommendation

The massive success of Irricana's unserviced park proves that regional demand is at an all-time high. With zero competing lots on the market within 35 kilometres, Beiseker can step in, buy this CN land, and hand it to local businesses ready to grow. The initial capital spent to acquire the land will be recovered through the resale, while the long-term dividend will be a thriving, beautiful, and financially resilient village.

I respectfully request that Council direct administration by Motion to investigate the ownership details of the vacant CN land as soon as possible

---

9.C

ATCO

July 6, 2026

ATCO File No. 1143790_11179

The Village of Beiseker
700, 1st Ave Beiseker
Alberta T0M 0G0

RE: ATCO Gas and Pipelines Ltd.
ATCO - GD 1143790 1105 - Inst Galv Ano & TS Beiseker 2
LEGAL: NW-12-28-26-4

ATCO Gas and Pipelines Ltd. is planning the installation of a test station with below-ground cabling within The Village of Beiseker. The scope of work will include hydrovac daylighting, installation of the test station, below-ground cabling, access setup, and full site restoration upon completion of construction activities. A sketch plan has been enclosed identifying the location of the proposed work area.

ATCO Gas and Pipelines will make every effort to minimize any excessive noise and traffic disruptions.

Please do not hesitate to contact Daniel Perrin, Land Agent if you have any questions or concerns at 587-215-3425 or by email at Daniel.Perrin@atco.com.

Sincerely,

D Perrin

ATCO Gas and Pipelines Ltd.
Daniel Perrin
Land Agent, Land
Natural Gas

Enclosure

1105 – INST GALV ANO & TS BEISEKER 2

VILLAGE OF BEISKER (NW12 28–26–4)

ATCO PROJECT NO. 1143790

DRAWING INDEX:

REVISION	DRAWING NUMBER	DRAWING NAME
0	1143790–TP–1	TITLE PAGE
0	1143790–1	SITE PLAN
0	1143790–2	DETAILS

TOTAL DRAWINGS: 3

REV	DATE	ISSUE	REVISION NOTES	PREPARED BY	CONFIRMED BY	CONFIRMED BY
0	15-JUN-2026	IFA	INITIAL ISSUE	JOHANNA LIU		

ATCO

PROJECT NAME: 1105 – INST GALV ANO & TS BEISEKER 2

PROJECT LOCATION:
NW12 28–26–4

PROJECT NUMBER:
1143790

DRAWING NAME:
TITLE PAGE

DRAWING NUMBER: 1143790–TP–1

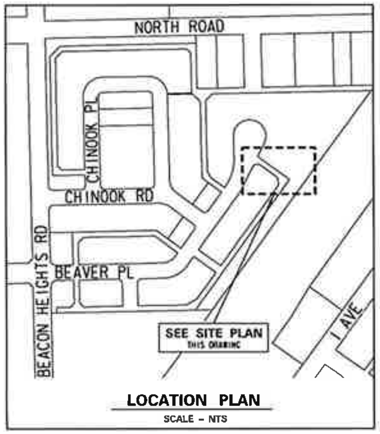

LOCATION PLAN
SCALE - NTS

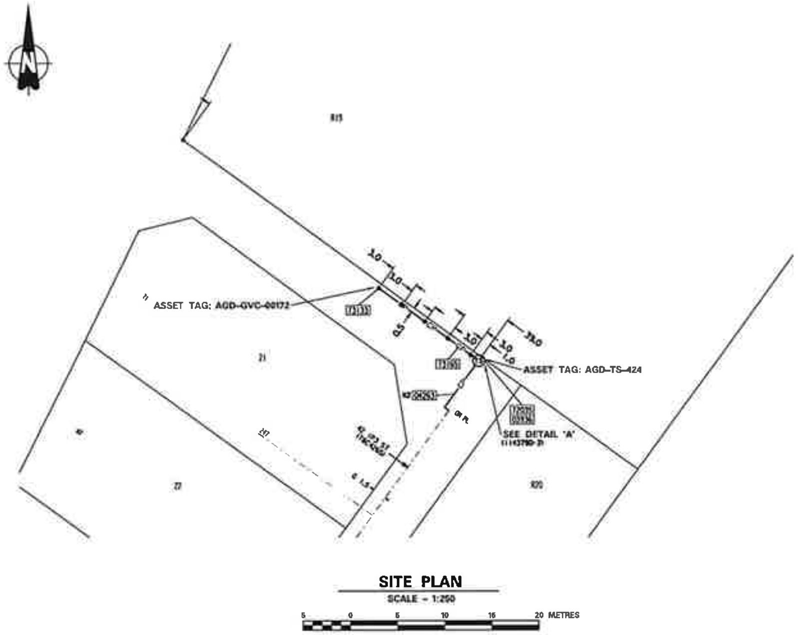

SITE PLAN
SCALE - 1:250

NOTES:

1. Complete a Hazard Assessment of the work site prior to commencing any work.
2. Locate all underground utilities (including any privately-owned utilities) prior to construction. Team Lead to submit a locate request through Utility Safety Partners (USP) a minimum of three (3) working days before they are required.
3. Team Lead/Inspector must contact the designer if there are any deviations to the design (including changes to fittings) or cost to the project. All changes and explanations for the changes must be recorded on the as-built drawings.
   Designer: Johanna Liu Phone: 587-582-8937
   Email Address: johanna.liu@atco.com
4. Team Lead/Inspector to ensure all field dimensions (FD) are measured with respect to the nearest property line and documented. All other dimensions are verified on the as-built drawings.
5. Return as-built drawings to Graphics within 15 business days of in-service /tie-in date to:
   Graphics, 14th floor ATCO Centre Edmonton; or
   Email to NaturalGasGraphics-DocumentSubmissions@atco.com.
6. Unless otherwise specified all pipe and fitting sizes are in millimeters (mm), and all dimensions are in meters (m).
7. Backfill and compact excavations to the same level of compaction as adjacent material.
8. Notify the Cathodic Protection Planner at CPPlanner@atco.com **at least one (1) week** prior to construction to assign a Cathodic Protection (CP) Technician to the project.
9. Survey all facility locations after installation including but not limited to test stations, anodes, ground beds, rectifiers and other facilities installed and record the locations in the as-built.
10. Contact all impacted landowners and concerned parties at least 48 hours prior to construction.
11. The Team Lead or Inspector is to ensure that all Landowner/Occupant Specification Sheets are completed in full, document all activity and notifications, and return to the applicable Land Agent immediately following construction.
    Land Agent: Phone:
12. This project addresses deficiencies identified in CIR 7952 in CP Subnetwork BEISEKER 2.
13. Team Lead to complete wildlife sweeps before construction start and fill out EIC Walkthrough Form.
14. Refer to WP 00733 Test Points for test station installation procedures.
15. CP Technician must use an appropriate connection method for bonding cables to steel mains following work procedures detailed in the table below. Clamps should only be used when thermite welding or pin brazing is not possible. CP technician must contact the project engineer if wall thickness is below 2.8mm or if thermite welding/pin brazing is not permissible.
    Measured Wall Thickness: ________

Connection Method	Work Procedure	Requirements
Thermite Welding	WP 00027	Pipe wall thickness greater than or equal to 2.8 mm (0.11 in)
Pin Brazing	WP 01333	Pipe wall thickness greater than or equal to 2.8 mm (0.11 in)
Steel Band / Clamp (Galvanic Systems Only)	WP 01318	Pipe wall thickness less than 2.8 mm (0.11 in). Contact Project Engineer for approval prior to use.

16. Refer to WP 00733 Test Points for test station installation procedures.
17. Install an appropriately sized shunt and record data in Maximo Child Work Order (to be created by CP Planner).
    Child Work Order # ________.

    Refer to WP 01264 Installation and Sizing Shunt Test Posts for shunt sizing procedures.

System Energization Readings	Anode Open Potential	Shunt Colour	Voltage Across Shunt	Current Across Shunt
	V Open (mV)	Orange (0.001Ω 25A) / Yellow (0.01Ω 8A) / Red (0.1Ω 2A)	V Shunt (mV)	V Shunt ÷ R Shunt (mA)

BILL OF MATERIALS

No.	REQ'D	USED	DESCRIPTION	CAT. No.
03936	1		TEST STN; BIELS TERMINAL; PLASTIC POST WHITE POLES BLUE TEST HEAD	1003936
04263	20m		WIRE; CATHODIC; 10 AWG; BLACK; RWU90; STRANDED; 300M/REEL	1004263
52592	5		SPLICE BOX; ANODE; DRYCONN VISILOCK WITH SMART GEL	1052592
72035	1		SHUNT; CATHODIC; 0.1 OHM RED, 2 AMP CAPACITY	1072035
72300	2		GROUND CLAMP; BRASS BODY/BRASS SCREWS; APPROVED FOR DIRECT BURIAL; FOR PIPE SIZES 1-1/4" - 2"	1072300
72303	2		CONNECTOR; RING TERMINAL; 10 AWG 1/4" STUD INSULATED WIRE; 12-10 YELLOW	1072303
73133	5		ANODE; MAGNESIUM HIGH POTENTIAL; 14.5KG (32LBS); COTTON BAG; RWU90 BLUE INSULATION AWG #10/7 STRANDED COPPER CABLE - 10M LENGTH	1073133
73165	5m		WIRE; CATHODIC; 8 AWG; BLUE, RWU90 1KV, STRANDED, 150M/REEL	1073165
73176	1		CONNECTOR; RING TERMINAL; 8 AWG 1/4" RED, COPPER, TIN PLATED	1073176

18. Take pipe-to-soil potentials before and after facilities are installed. Record data in Maximo Child Work Order # ________.

Location	Potential Before (mV)	Potential After (mV) ON	Potential After (mV) OFF	Date Completed YY-MM-DD	Initial
Exposed Pipe		N/A	N/A		
At Test Station	N/A				
11 Beaver Pl (SR 221)					
10 Beaver Pl (SR 222)					
125 North Rd (SR 46)					
117 AB-72 (SR 32)					
30 Chinook Crescent* (SR 334)					
116 North Rd* (SR 249)					

*To confirm discontinuity between CP Subnetworks and/or Transmission Assets

19. Use an auger or hydrovac to excavate holes and place anodes as follows:
    a. If native soil has low gravel/low sand content use native soil to backfill anode. If not, use imported fill (i.e. black soil or loam). Add to bottom of hole and hand compact until a 150mm (6") compacted layer is achieved. Add water as necessary to achieve adequate compaction.
    b. Place anodes vertically in hole and continue backfilling and compacting to approximately 150mm (6") above top of anode.
    c. Continue adding fill compacting in 100 - 150mm (4" - 6") lifts until hole is filled.
    d. Complete surface restoration as required.

LEGEND

EXISTING MAIN: (HP) (IP) (MP) (LP) (Ab)
PROPOSED MAIN:
PROPOSED ABANDONMENT:
CP CABLING: —CP—
AC CABLING: —PW—
TRACER WIRE: —TW—
PROPOSED SERVICE / STUB:
PROPOSED METER / METER BANK: X / XXXX

PRESSURE TESTS								PIPE RECORD
TEST REQUIREMENTS				TEST RECORD				
IN-SERVICE DATE	SEGMENT NO.	TEST DURATION (HRS)	TEST PRESSURE (kPa)	TEST DURATION (HRS)	TEST PRESSURE (kPa)	TEST MEDIUM		

REV	DATE	ISSUE	REVISION NOTES	PREPARED BY	APPROVED BY
00	16-JUN-2025	IFA	INITIAL ISSUE	JOHANNA LIU	NOT APPLICABLE

CONSTRUCTION RECORD

PERMIT STAMP | PROFESSIONAL STAMP

PREPARED BY: JOHANNA LIU
CHECKED BY: NOT APPLICABLE

ATCO

PROJECT NAME: 1105 - INST GALV ANO & TS BEISEKER 2
PROJECT LOCATION: NW12 28-26-4
PROJECT NUMBER: 1143790
DRAWING NAME: SITE PLAN
DRAWING NUMBER: 1143790-1

NOTES:

1. See General Notes on 1143790-1

BILL OF MATERIALS
SEE 1143790-1

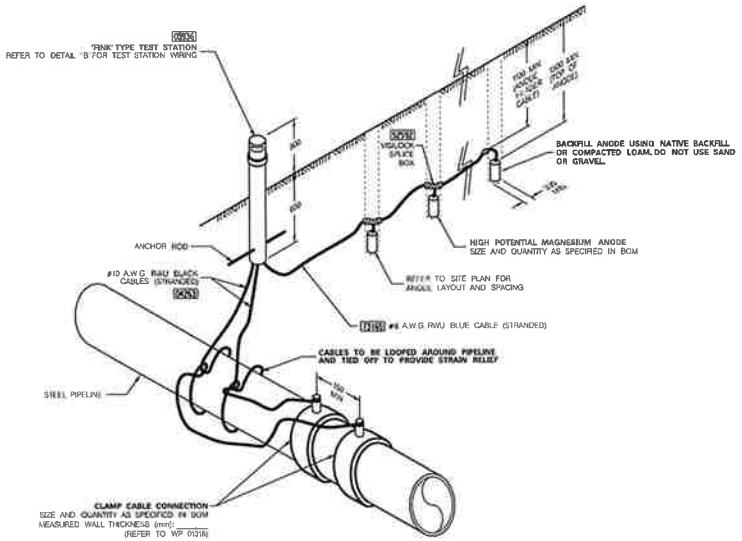

DETAIL 'A'

3 WIRE TEST STATION & ANODES ASSEMBLY (CLAMP)
SCALE – NTS

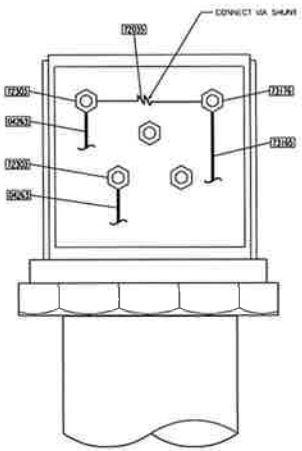

DETAIL 'B'

TEST STATION WIRING
SCALE – NTS

LEGEND

EXISTING MAIN:	(HP)
	(IP)
	(MP)
	(LP)
	(AB)
PROPOSED MAIN:	
PROPOSED ABANDONMENT:	
CP CABLING:	CP CP
AC CABLING:	PW PW
TRACER WIRE:	TW TW
DEVELOPER INSTALLED SLEEVE:	
PROPOSED SERVICE / STUBS:	
PROPOSED METER / METER BANK:	X / XXXX

ATCO Gas Main Designation
373 IPS ST J1
Joint Trench
Pipe Material
Maximum Operating Pressure
Size of Pipe in Millimeters

Drawn By:	[illegible]
Municipality:	VILLAGE OF BEISEKER
Ref No:	[illegible]

PRESSURE TESTS						
TEST REQUIREMENTS				TEST RECORD		
IN-SERVICE DATE	SEGMENT NO.	TEST DURATION (HRS)	TEST PRESSURE (KPA)	TEST DURATION (HRS)	TEST PRESSURE (KPA)	TEST MEDIUM

PIPE RECORD										
	MANUFACTURER	HEAT	DESIGNATION	CODE	TERMINAL PIPE SIZE	SDR	COIL NO.	PLANT LOCATION	PROD DATE	PROD RFID
EX MAIN AT TIE-IN										
NEW PIPE:										
NEW PIPE:										
NEW PIPE:										
NEW PIPE:										
NEW PIPE:										
NEW PIPE:										
NEW PIPE:										
NEW PIPE:										
NEW PIPE:										

REV	DATE	ISSUE	REVISION NOTES	PREPARED BY	APPROVED BY
1B	16-JUN-2025	IFA	INITIAL ISSUE	JOHANNA UU	NOT APPLICABLE

CONSTRUCTION RECORD				
	NAME / ID#	INITIAL	START DATE	END DATE
FUSE(S) / RESIDENTS				
CREW CHIEF / INSPECTOR				
☐ REMARK PLAN STAKED BY				
EMPLOYEE IN CHARGE				
CONSTRUCTED BY (NAME / COMPANY)				
EXCAVATION PERMIT / EDGAR #				

PERMIT STAMP	PROFESSIONAL STAMP	PREPARED BY
		JOHANNA UU
		CHECKED BY
		NOT APPLICABLE

ATCO

PROJECT NAME: 1105 – INST GALV ANO & TS BEISEKER 2

PROJECT LOCATION:
NW12 28-26-4

PROJECT NUMBER:
1143790

DRAWING NAME:
DETAILS

DRAWING NUMBER: 1143790–2

From: Melissa Barnes <mbarnes@npf-fpn.com>
Sent: July 14, 2026 10:11 AM
To: David Ledoyen
Cc:
Subject: Call to Action: Strengthening Public Safety in Alberta | Polling Results
Attachments: Call to Action to the Government of Alberta_2026.pdf; NPF Alberta W9 .pdf

q.d

Dear Mayor David Ledoyen and Village of Beiseker Council,

On behalf of the National Police Federation,

As the Government of Alberta continues to consider changes to policing and public safety across the province, municipalities have an important opportunity to speak with a unified voice on issues that directly affect their communities.

The National Police Federation (NPF) proudly represents nearly 20,000 RCMP Members serving across Canada and internationally, including over 3,100 who serve in Alberta. We are inviting municipalities and stakeholder groups to support the attached Call to Action. It urges the Government of Alberta to pause further investment in an Alberta Sheriffs Police Service (ASPS) until a comprehensive, independent, and publicly available feasibility study is completed. It also calls for evidence-based investments in policing, the justice system, mental health and addiction support, and community-based crime prevention.

Also attached is our latest public opinion polling, which confirmed once again that 76% of Albertans are satisfied with the RCMP and 67% feel they have not been adequately consulted by creating an Alberta Sheriffs Police Service. The polling also indicates that most Albertans do not support replacing the RCMP and believe the province should prioritize other public safety needs.

If your municipality or stakeholder group is interested in signing onto the Call to Action, please reply to this email and include your municipality's logo no later than **September 30th, 2026**. Your logo will be included alongside the other participating organizations in the final public release.

Should you have any questions or wish to discuss the initiative further, we would be pleased to set up a presentation or meeting time with you or members of your Council.

Thank you for your time and consideration. We hope the Village of Beiseker will join us in advocating for transparent decision-making and practical investments that strengthen public safety for all Albertans.

Sincerely,

Melissa Barnes, Government Relations Advisor

2026

CALL TO ACTION
TO THE GOVERNMENT OF ALBERTA

Dear Premier,

Albertans deserve safe and healthy communities where residents can rely on essential public safety, health, social, and justice systems. Provincial and municipal governments share responsibility for achieving these outcomes, and municipalities expect the Government of Alberta to be a transparent, accountable, and reliable partner in delivering them.

Municipalities are on the front lines of community safety, working closely with residents, businesses, and law enforcement partners every day. Despite this, municipalities have not been provided with a clear, transparent, and evidence-based plan outlining the full financial, operational, and public safety implications of establishing an Alberta Sheriffs Police Service (ASPS) or transitioning policing responsibilities away from the RCMP. No comprehensive feasibility study, detailed costing model, or long-term funding framework has been made available to inform municipal decision-making or public understanding.

At the same time, Alberta's existing policing and public safety systems are under increasing pressure. Challenges related to rural crime, mental health and addictions, and violent repeat offenders require immediate and sustained investment. Rather than diverting significant public funds towards the creation of a new police service, the Government of Alberta should prioritize strengthening and properly resourcing the systems already in place.

Policing reform must be guided by evidence, transparency, and public confidence. Decisions of this magnitude, affecting community safety, municipal budgets, and taxpayer dollars, must be made in partnership with municipalities and with the clear support of Albertans.

We, the undersigned, call on the Government of Alberta to:

- Cease further investment in and advancement of the Alberta Sheriffs Police Service as a replacement for RCMP municipal policing.
- Release a comprehensive, independent, and publicly available feasibility study, including full lifecycle costing, governance structures, and operational impacts of any proposed policing model changes.
- Seek explicit public support before proceeding with any plan to replace or significantly restructure policing in Alberta.
- Strengthen Alberta's existing policing model by:
  - Increasing RCMP officer levels and resources in communities, while ensuring sustainable and predictable funding; and
  - Invest in the Alberta Sheriffs' existing mandate as a complementary public safety service, including targeted enforcement, rural crime initiatives, and court security.
- Strengthen the justice system by addressing bail reform challenges and repeat violent offending; increasing the number of Crown prosecutors and Provincial Court judges; and ensuring timely access to justice.
- Expand integrated public safety approaches, including police and mental health crisis teams, addiction supports, and community-based crime prevention initiatives that address root causes of crime.

Melissa Barnes
Government Relations Advisor | Conseiller, relations gouvernementales

National Police Federation | Fédération de la Police Nationale

+1 (613) 212-7883
npf-fpn.com

NATIONAL POLICE FEDERATION

FÉDÉRATION DE LA POLICE NATIONALE ™

@NPFFPN

nationalpolicefederation

NPF_FPN

National Police Federation

The mission of the National Police Federation is to provide strong, professional, fair and progressive representation to promote and enhance the rights of RCMP Members.La mission de la Fédération de la police nationale est de fournir une représentation forte, professionnelle, juste et progressive afin de promouvoir et faire avancer les droits des Membres de la GRC.
This email may contain PRIVILEGED AND/OR CONFIDENTIAL INFORMATION intended only for the use of the addressee. If you are not the addressee or the person responsible for delivering it to the person to whom it was addressed, you may not copy or deliver this to anyone else. If you receive this email by mistake, please immediately notify us.

Ce courriel peut contenir des informations CONFIDENTIELLES ET/OU PRIVILÉGIÉES exclusivement restreintes à l'usage du/de la destinataire. Si vous n'êtes ni le/la destinataire, ni la personne responsable pour la livraison au/à la destinataire, il ne vous est pas permis de copier ou d'acherminer ceci à toute autre personne. Si vous avez reçu ce courriel par erreur, nous vous serions reconnaissants de bien vouloir nous faire part par téléphone ou courriel immédiatement.

9.e

July 15, 2026

Mayor and Council

Village of Beiseker

PO Box 349

Beiseker, AB T0M 0G0

RE: Formal Objection to Inequitable Tax Increase on Unoccupied Farmland (Roll Numbers: 2700, 2701, 112)

Dear Mayor and Members of Council,

I am writing to formally register my deep concern regarding the recent municipal tax assessments for my unoccupied farmland within the Village of Beiseker, specifically identifying property roll numbers **2700**, **2701**, and **112**. This year, my property taxes for these parcels have increased by an astonishing **six times** (600%) compared to last year's rate. While I understand the complexities of municipal budgeting, an escalation of this magnitude on agricultural land is entirely unjustified from the reality of the municipal services provided to these properties.

The fundamental principle of municipal taxation relies on a fair correlation between the taxes levied and the infrastructure or services accessible to the property. My unoccupied farmland receives absolutely zero municipal utility services. There is no **water hookup**, no **sewer system**, and no **garbage pickup**. Furthermore, these parcels benefit from none of the town amenities that occupied residential or commercial owners routinely enjoy.

Compounding this financial burden is the severe lack of basic infrastructure maintenance provided to our location. The access road leading to our land (dump road out of town) is left in a state of chronic neglect, rendering it **undrivable** most of the time due to poor municipal road upkeep. Additionally, the drainage ditches running alongside the road are entirely ignored, and the grass is never cut. This lack of vegetation management blocks visibility, impacts drainage and creates drifting snow in winter.

Paying six times more in taxes on roll numbers 2700, 2701, and 112 while enduring a complete absence of utility services and a total failure of basic road maintenance is

entirely unsustainable. I respectfully request that Council review these specific assessments, justify the mechanical basis for this extreme spike, and take action to adjust the tax rate to a fair, logical level.

Thank you for your attention to this matter. I look forward to your timely response.

Sincerely,

Corwin Skuce

Po Box 488
Beiseker, Alberta
403-819-4073
coskuce@icloud.com

Council Notes:

Minimum Tax Confirmation

The Village received confirmation regarding the application of the minimum tax to municipal property assessments. Lavinia Henderson, Chief Financial Officer, contacted Alberta Municipal Affairs and spoke with a Financial Advisor to confirm the appropriate application of the minimum tax.

Alberta Municipal Affairs confirmed that the minimum tax is to be applied to **all property classes** and cannot be applied selectively to specific assessment classes.

The Financial Advisor confirmed that the Village of Beiseker **properly applied the minimum tax for the 2026 taxation year**. Based on this confirmation, the Village will continue to apply the minimum tax to the applicable properties in all future tax years in accordance with the requirements confirmed by Alberta Municipal Affairs.

Alberta Municipalities
Strength In Members

9.f.

Councillor Accountability Framework: ABmunis Discussion Guide Feedback

Bill 28: Municipal Affairs and Housing Statutes Amendment Act was introduced on April 2, 2026, and received Royal Assent on May 14, 2026. The amendments include provisions establishing the new Councillor Accountability Framework, reflecting the Government of Alberta's expectation that elected officials act professionally, make decisions in the public interest, and are accountable for their conduct.

Municipal Affairs hosted limited invitation only engagement sessions with administrators on July 13 and 16, 2026, and with elected officials on July 14 and 17, 2026. Participants included representatives from Alberta Municipalities (ABmunis), the Rural Municipalities of Alberta (RMA), the Local Government Administration Association of Alberta (LGAA), the Alberta Rural Municipal Administrators' Association (ARMAA), the Association of Summer Villages of Alberta (ASVA), the Alberta Mid-size Cities Mayors' Caucus (MCMC), and the cities of Edmonton and Calgary.

Municipal Affairs has indicated that feedback from these sessions, together with written submissions received by August 7, 2026, will inform the development of the regulations required to implement the framework. Implementation timelines have not yet been announced.

DRAFT: NOT APPROVED BY THE ABMUNIS BOARD

Discussion Guide Questions	ABmunis Position/Recommendation

Briefly, from your perspective, what is the most important outcome of a councillor accountability framework?	• Principle of independent investigators
	  ○ It is critical that the selected investigators included on the Minister-approved roster are truly independent. There must be no interference from the municipality or province when investigating and making recommendations and they must be non-partisan.
	• Municipal autonomy
	  ○ Municipalities know their communities and corporate structures best; the framework should recognize this.
	• Accountability

	○ The framework should include strong accountability mechanisms for municipalities, councils, sanctioned individuals, and investigators. • Transparency ○ The framework and its processes should be easy to understand and not require legal interpretation. Given the public interest in framework violations, investigation findings should be publicly shared.
Stage 1: Complaint Process	
The following categories are in scope for a councillor accountability complaint (in addition to egregious and threatening behaviour, and pecuniary interest which will be discussed separately): • Misuse of municipal assets • Misuse of confidential information • Improper use of influence What details or definitions should be considered for these categories in the regulation?	• Misuse of Municipal Assets – The framework should clearly prohibit elected officials and committee members from using municipal assets or services for personal gain, including to political parties, and during election campaigns, to promote ethical standards, stewardship, and public trust. This provision ensures fairness and provides a mechanism for enforcement should such misuse occur. • Misuse of Confidential Information - The current privacy legislation primarily holds municipalities accountable for breaches of confidential information, rather than individual elected officials, creating a gap in personal accountability. A framework should establish clear principles and mechanisms for holding individuals responsible for maintaining confidentiality. • Improper use of influence – The framework should prohibit elected officials from exploiting their position for personal gain. Any definition should include principles of following the established governance structure and avoiding situations where direction has been provided to staff through meetings other than council meetings, during events, and so on. These actions could be seen as circumventing the regulatory process. Rules around improper influence reinforce accountability and integrity in municipal decision-making by aligning with existing conflict of interest laws for provincial elected officials.

How should egregious or threatening behaviour be defined for the regulation? For reference, please consider the table below.	• Existing definitions in Occupational Health and Safety (OHS) legislation is sufficient to establish parameters. • Egregious and threatening behaviour should include instances of violence or harassment as defined in OHS legislation. The definitions and examples below are robust and there is no reason to reinvent definitions between how we expect workers in all industries across Alberta to be treated versus how we expect elected officials to behave while fulfilling their duties. • OHS defines "Violence" as the threatened, attempted, or actual conduct of a person that causes or is likely to cause physical or psychological injury or harm, and includes domestic or sexual violence: o physical attacks or aggression (hitting, shoving, pushing, or kicking, throwing an object, kicking and object someone is standing on). o Threatening behaviour (shaking a fist in someone's face, wielding a weapon, trying to hit someone, trying to run down someone using a vehicle or equipment, destroying property, or throwing objects). o Verbal or written threats (verbally threatening to attack, leaving threatening notes or sending threatening emails to express an intent to inflict harm). o Domestic violence. o Sexual violence. • "Harassment" is any single incident or repeated incidents of objectionable or unwelcome conduct, comment, bullying, or action by a person that the person knows or ought reasonably to know will or would cause offence or humiliation to a worker, or adversely affects the worker's health and safety, and includes: o conduct, comment, bullying or action because of race, religious beliefs, colour, physical disability, mental disability, age, ancestry, place of origin, marital status, source of income, family status, gender, gender identity, gender expression, and sexual orientation, and

	○ a sexual solicitation or advance but excludes any reasonable conduct of an employer or supervisor in respect of management of workers or a work site. • In addition to the above, ABmunis recommends the following also be considered as a part of "egregious behaviour": ○ Respecting the decision-making process – The framework should address instances where a councillor actively releases information contrary to or against the decision of council. ○ Misinformation/disinformation – The framework should address the deliberate spread of misinformation and disinformation by elected officials. Similar to respecting the decision-making process, attempts to spread misinformation and disinformation regarding the municipality, decisions made by council, or related process can lead to serious governance issues, conflict between the municipality and the public, and an erosion of trust between administration and council, and council and the public. ○ Use of technology in closed sessions – elected officials should respect the process for closed sessions. They must not use recording devices and must ensure it can be verified there are no other individuals present when a councillor is attending remotely (this can be done by requiring cameras be turned on unless otherwise permitted by the rest of council). • There is also a gap related to the acceptance and disclosure of gifts.. While municipalities can establish policies on gifts and benefits, these lack effective enforcement mechanisms for holding elected officials accountable. In contrast to the provincial level, where the *Conflict of Interest Act* provides clear guidance and oversight, a similar accountability structure does not exist municipally, risking transparency and public trust.
Should there be a fee for submitting councillor accountability complaints during the preliminary review process? a)If 'yes,' what should the fee be?	• ABmunis continues to be concerned about the cumulative impact of costs on municipalities.

b)If 'no', why not?	• Regulations related to costs, including establishing fees for complaints, and standard fee structures for preliminary reviews and investigations, will be critical to ensure that the framework is not only accessible to municipalities, but also reducing unintended financial strain.
	• Consideration should be given to establishing fees to file a complaint.
	• ABmunis recommends that a municipality would hold the fee until the preliminary review has concluded. If the review finds that the complaint was frivolous or vexatious or falls outside of the scope of the accountability framework, the municipality would retain the fee.
	• If the review determines the complaint falls within the framework, the fee is refunded to the complainant.
	• The intention is not to deter complaints but rather to recognize the costs that municipalities will be responsible for when a complaint is received and ensuring there is accountability for the person filing the complaint.
	• To reflect differences among municipalities in Alberta, the following may be considered:
	  ○ The framework could set a minimum and maximum fee, while allowing each municipality to choose a fee by bylaw or resolution that fits its needs, as long as the fee does not exceed the maximum.
	  ○ Alternatively, the framework could set out that each municipality is responsible for establishing a fee or fee structure by bylaw, with the decision of what is appropriate being left to each municipality, further respecting municipal autonomy.
	• Some members have raised that there should be no requirement for a fee to file a complaint. However, depending on the results of the preliminary review, specifically if the investigator has determined the complaint to be frivolous or vexatious, the complainant would be responsible for the full costs of the preliminary review.

	○ This approach could deter complaints as the costs of preliminary reviews are likely to far outweigh any established fee for filing. • The framework should clearly restrict that any fee must be paid personally by an elected official, while explicitly prohibiting the ability to use municipal assets, including their elected official budget, crowd-sourcing, or campaign contributions. • Additional considerations need to be made for situations where a councillor hires a lawyer to help submit a complaint or defend themselves during the preliminary review or investigation process. The framework should consider whether the municipality can cover those costs or if they are incurred as personal expenses by the elected official.
During the preliminary review process, should there be timelines for: a)Selecting an investigator? b)Submitting the preliminary review report?	• Timelines should be established for selecting an investigator and submitting the preliminary review to prevent inaction • Timelines to select an investigator could be as simple as "at the next council meeting or within 30 days of receiving the complaint, whichever is later." • Relating to the preliminary review, it is difficult to determine what is reasonable as different types of complaints may require different timelines. ○ Option 1: Require the completion of the preliminary review no later than 45 days after council has passed a resolution appointing an investigator. If additional time is required, the investigator may request additional time from council. ○ Option 2: Allow the municipality to set the timeline for reporting by the investigator. This recognizes the needs of each municipality, as well as potential complexity of a complaint. ○ Option 3: Establish a timeline as described in Option 1 but extensions may only be granted by the Minister. • Outstanding Question to Municipal Affairs: ○ Is the intention for the Minister to abide by the same timelines as established for council if the Minister exercises their authority under s. 146.03 (2) to initiate an investigation?

Should there be publication requirements for a preliminary report? a) If 'yes,' what should the requirements be? b) If 'no,' why not?	• Legislation requires the preliminary report to be filed with Council and the Minister, and to advise if the investigation has concluded. • There is no legislative requirement to make the preliminary report public. In comparison, the Investigation Report is required to be filed in a closed session of council and made public as outlined by the framework (s. 146.07). • Given the resolution to appoint an investigator must be made in public, some version of the preliminary report should be published. Appropriate restrictions could be considered in the framework to protect identifiable information and the identities of the elected officials involved, reducing the potential for the complaints and reviews to be politicized or weaponized. • Potential options for a publicly available report could include: o Requiring the municipality to redact the report in alignment with requirements under the *Access to Information Act*. o Require the investigator to draft a version of the report that is appropriate for public consumption, aligning with requirements of the *Access to Information Act*, for example a high level executive summary. The full preliminary review would remain protected with only the executive summary being released.
Who should be responsible for the custody and retention of records related to preliminary reviews?	• Given the records relate to the municipality, it is practical for the municipality to be responsible for the custody and retention of the records.
How long should preliminary review records be retained?	• Options include: o Ability for municipalities to set the retention in accordance with their records retention policies. o The duration of the council term. o A length of time (i.e.: 30, 60, 90, 120 days) following the conclusion of the investigation or the filing of the preliminary review, if the investigator has determined a full investigation is not proceeding.

Is there anything else you would like to add about the preliminary review process?	• A gap exists in the legislation where administration cannot personally bring complaints against an elected official and must rely on another elected official doing so on their behalf. Consideration must be taken to create a path to allow for administration complaints. • Consideration needs to be afforded to political staffers who are not administration but may have complaints that align with the framework, this is especially true in large municipalities where elected official staff are not considered under the typical employee/employer structure of the municipality. • Municipal Affairs should consider guidance documents related to how municipalities may draft policies pertaining to public complaints as well as the messaging that will be available to ensure transparency to the public. • Consideration must be made for anonymous complaints and maintaining confidentiality, particularly through a trauma-informed lens. It is not necessary for council to know the details of the complaint before appointing an investigator for confidentiality of the councillors and complainants. • The framework should consider a process to manage or address "serial filers". This could potentially be addressed through municipalities being afforded the opportunity to set a filing fee that increases if complaints from a single elected official continue to be frivolous or vexatious. • Bill 28 analysis included several outstanding questions related to complaints and investigations, including: ◦ Are municipalities required to establish a policy for the purposes of outlining the form in which a complaint is considered "acceptable by council"? If so, what is the timeline for councils to establish their policies after the implementation of any regulation?
Stage 1: Complaint Process – Pecuniary Interest	
Do you have any operational concerns about the process described in the map? a) If 'yes,' what concerns do you have?	• As it relates to complaints of pecuniary interest, requiring complaints to be filed within one year is too long due to its seriousness. • Complaints should be filed within a finite amount of time to mitigate potential delays (ie: 30 - 90 days from the date that the council or councillor

b) If 'yes,' do you have any suggestions for how to solve or mitigate these concerns?	becomes aware of the potential contravention). This recognizes the impact that a complaint, depending on the severity, can have on council, potentially effecting the governance of the municipality, as well as impacting public confidence in council.

Should there be a timeline for a councillor who is subject to a councillor accountability complaint, investigation, or finding to resign voluntarily?	• This question is unclear if it is referring to before, during or after a complaint has been filed, and specific to only complaints related to pecuniary interest.
	• The legislation is clear that an investigation stops if the person subject to a complaint resigns. This section of the Act is problematic and could be used by elected officials to purposefully stop an investigation only to run again in the by-election (s. 146.03).
	• The legislation is also clear that if an investigator finds reasonable grounds to believe an elected official may have violated pecuniary interest rules, and be subject to disqualification, the investigator must immediately stop their investigation (s. 146.06).
	• There is a practical benefit to provide a timeline for an individual subject to of a complaint related to pecuniary interest to resign voluntarily prior to council filing an application for disqualification to the court.
	• ABmunis recommends that caution be taken when creating a timeline that could be seen as council delaying or failing to act.
	  ○ 30 days provides sufficient time for the subject of the complaint to act and for council to prepare for the court filing, if necessary.
	  ○ ABmunis continues to raise serious concerns if a person resigns to stop an investigation but then runs in the by-election. There is no accountability or transparency regarding the complaint given this won't mean the complaint or potential contravention has been dealt with or won't be an issue into the future.
	• Amendments to the *Municipal Government Act* and the *Local Authorities Election Act* should be considered to prevent an individual who has resigned during an investigation from running in the election held immediately after the investigation concluded.

	• Legislative amendments should also be considered to require an investigation to continue despite a resignation, with the resulting investigation report continuing to be submitted to council. This prevents weaponization of the framework and further promotes the principles of accountability and transparency.

Is there anything else you would like to add about the pecuniary interest complaint process?	• ABmunis continues to question why only pecuniary interest was included in the framework when there are several other grounds for disqualification (ie, ceasing to be eligible for nomination under the *Local Authorities Election Act*).
	• There were several outstanding questions raised in the Bill 28 Analysis:
	  ○ Are municipalities permitted to establish a process for receiving complaints from the public that could then inform whether a councillor may wish to proceed with a complaint under the framework?
	  ○ Will the regulations include a mechanism to manage multiple complaints on the same issue or allow for multiple councillors to be named as complainants on the complaint?
	  ○ Does council formally accept a complaint, if in the acceptable format, by resolution or is it submitted in closed session? Investigator reports are first submitted in closed session, but similar processes are unclear related to complaints.

Stage 2: Investigation and Sanctions	
What are appropriate sanctions for violating the councillor accountability framework?	• Possible sanctions include written reprimands, required apologies, publication of reprimands or apologies, mandatory training, suspension or removal from leadership roles or committees, and reducing or suspending remuneration related to duties – these align with previous Code of Conduct Regulations. • Sanctions should be accompanied by a timeframe to complete, otherwise it is reasonable to expect that some sanctions will never be acted on rendering the entirety of the framework ineffective.

	• Sanctions related to mandatory training should be accompanied by clear expectations of who is responsible for the cost of the training (ie: the municipality or the elected officially personally).
	• To ensure accountability, consideration should be given to an escalation process. For example, council has passed a resolution requiring a person subject to a complaint to issue a letter of apology. The councillor does not do so. Council should have the ability to then pass an escalating sanction. Further, if a person subject to the complaint continues to refuse a council sanction, there should be a mechanism to allow for Minister intervention to impose an escalation sanction.
	• Other Canadian jurisdictions impose additional sanctions, such as fines or, in cases of non-compliance, suspension of a person's authority to exercise any power, duty, or responsibility until they comply.
	• As it relates to fines, this could be seen as a serious escalation as municipalities could consider any unpaid fines as being indebted to the municipality. If these types of fines can be considered there are implications for an individual to be eligible to run for election under the *Local Authorities Election Act*.
	• The framework should set a list of sanctions that municipalities could choose from to set options through policy or bylaw that are applicable to the municipality. We recommend that it be up to the investigator to apply sanctions to specific circumstances.
	  ○ Municipalities could not select sanctions that are not provided for in the framework.
	  ○ This approach reflects that sanctions that may be applicable to larger municipalities do not carry the same weight in smaller municipalities (ie: suspension of pay) and vice versa.
	  ○ This approach depoliticizes the sanction process.

What should the timeline be for: a) Initiating full investigation? b) Submitting investigation report?	• Similar to fees, the regulation could establish a maximum timeline but municipalities could set a faster standard by bylaw – supports principle of municipal autonomy.

c) Passing resolution to accept the investigator's report?
d) Making a decision to apply/not apply sanctions?
	• In the spirit of accountability, the following could be considered:
	  ○ Initiating a full investigation - After receiving the preliminary review, council must consider the matter at the next council meeting or within 30 days, whichever is later. There may be instances that council may have to hold a special meeting as they do not meet every two weeks or monthly. However, this timeline promotes the complaints and investigations being addressed in a timely manner to prevent further governance issues and erosion of public trust.
	  ○ Resolution to accept the investigators report - After receiving the investigation report, council must consider the recommendations and determine to apply or not to apply at the next council meeting or within 30 days, whichever is later.
	  ▪ This recognizes that the report is provided in a closed meeting of council and provides members of council the opportunity to review prior to accepting the report or the recommended sanction(s).
	• As mentioned above, is this question also contemplating a timeline for investigations that are initiated by the Minister? If so, the regulation should be specific between investigations initiated by complaint to council versus investigations initiated by the Minister.

Are the powers of the investigator in the *Act* sufficient? Why or why not? a) If 'insufficient,' what do you feel is missing?	• Overall powers outlined in section 146.03(3) are clear and concise. • There may be opportunity within the framework to: ○ Clarify a timeline to respond to an inquiry made either (a) orally or in writing of any person, or by (b) demanding the production for examination of records or documents. This may be important if establishing a timeline for an investigator to submit an investigation. Without the investigator having the authority to establish a timeline to respond, a person could delay to the point of the investigator having insufficient information for the report but having no choice but to proceed with submitting the report to council.

	○ Clarifying who is responsible for copies made under subsection (c). For example, is it the municipalities responsibility to assist the investigator if copies are requested and by extension, the costs of the copies? ○ Clarification if the investigator must first provide notice when accessing municipal land and facilities. This could be especially helpful to ensure that appropriate resources are available to the investigator. • The above clarity may help to determine what constitutes a failure to comply under section 146.04 related to obstructing an investigation. This clarity may support identifying if an offence has occurred and need to be referred to the appropriate police service under the *Provincial Offences Procedures Act.* • Consideration should be made for protections and powers of investigators to align with those granted under the *Public Inquiries Act.*
What qualification should investigators/appeal commissioners have? a) Is there a specific occupation or profession that should be eligible to be a commissioner based on education, role requirements, or professional experience?	• Municipal experience is crucial – recognizes the complexities of municipal governments and the roles and responsibilities of administration and council. • Consideration of those with legal backgrounds, previous investigative experience, previous experience in independent offices of the legislation (i.e.: office of the ethics commissioner, ombudsman, or public interest commissioner).
What criteria should be considered when reviewing applications for these roles?	• Same as above – experience in municipal government, legal, investigation, or other non-partisan experience. • It is critical that investigators are truly impartial and non-partisan. This could extend to having no provincial or municipal political party affiliation and to have not ran for any provincial or municipal political party in the previous 10 years.
Should there be a term limit for these roles? a) If 'yes,' how long should the term be?	• No position at this time.

Should there be publication requirements for an investigation report? a) If 'yes,' what should the requirements be? b) If 'no,' why not?	• Section 146.07 (3) requires a report to be submitted to council in a meeting closed to the public but subsection (4) requires council to make the report publicly available in accordance with the framework. The wording of subsection (4) implies that there would be a publication at some point. • If council has accepted the investigation report it should be made public in the spirit of accountability and transparency. • It would be reasonable to require the publication within a time limit (for example, 7 days from council receiving the report). • Consideration should be taken to redact personal information in accordance with the *Access to Information Act* and *Protection of Privacy Act*.
Who should be responsible for the custody and retention of records related to investigation reports?	• Same comment as preliminary review reports. • Given the records relate to the municipality, it is practical for the municipality to be responsible for the custody and retention of the records.

How long should investigation report records be retained?	• Same comment as preliminary review reports.
	• Options include:
	  ○ Ability for municipalities to set the retention in accordance with their records retention policies.
	  ○ The duration of the council term.
	  ○ A length of time (i.e.: 30, 60, 90, 120 days) following the conclusion of the appeal period or after a report related to an appeal has been delivered.

Is there anything else you would like to add about the investigation and sanction process?	• Section 146.03 requires council to appoint an investigator and pay the costs of the investigation. Will the framework establish a rate for investigators? If not, investigators could charge any rate they choose, leading to municipalities selecting an investigator with the lowest rate, further leading to a small number of investigators being inundated with complaints. • It has also been recommended that the legislation be amended to require council to accept and impose the sanction(s) as recommended by the investigator, rather than have the ability to alter the sanction or impose no sanction at all.

	• The framework should consider creating a standard for reports to ensure consistency from investigators, this applies to both preliminary and investigation reports. • The framework must specifically address repeated investigations related to the same topic/event and specifically prohibit a secondary investigation outside of the appeal process. • An evaluation process for investigators should be established.
Stage 3: Appeal Process	

Should there be a fee for a councillor to file an appeal?
a) If 'yes,' what should the fee be?
 	
What should the timeline be for:
a) Submitting a complaint regarding the outcome of the investigation and sanctioning process?
b) Filing an appeal?
c) Appointing an appeal commissioner?
d) Conducting appeal hearing?
e) Submitting recommendations to the Minister on appeal?
f) Minister decisions/order on recommendations?
g) Publishing required documents?
	• Yes, however, the fee should not be prohibitive for councillors in accessing an appeal and should not exceed a filing fee with the Court of Kings Bench. The principle of a filing fee aligns with ABmunis position with a fee to accompany the filing of complaints.
	• Timelines
	  ○ Submitting a complaint to the municipality– within 30 – 90 days of the alleged contravention or the date that that it becomes known that an alleged contravention occurred.
	  ○ Investigation and sanction process – unclear if this is related to the investigation and sanctions for the appeal or during the initial investigation?
	  ▪ The investigation process will depend on the severity and complexity of the investigation. Perhaps establishing a maximum (i.e.: 60 days) with a requirement for a council resolution to extend, up to an additional 60 days?
	  ○ Filing an appeal - within 30 days of council accepting the investigators report.
	  ○ Appointing an Appeal Commissioner – Minister required to appoint – uncertain of what is realistic, 30 or 60 days.
	  ○ Conducting an Appeal Hearing – 30 days

	○ Submitting Recommendations to the Minister – should align with any timeline established for the investigation with the option for Ministerial extension. ○ Minister decision/order on recommendations - uncertain of what is realistic for ministerial approvals. ○ Publishing required documents – should avoid delays – within 14 days of Minister's decision.
Who should be responsible for the custody and retention of records related to appeals?	• Same comment as preliminary review reports and investigations. • Given the records relate to the municipality, it is practical for the municipality to be responsible for the custody and retention of the records.
How long should records related to appeals be retained?	• Decisions under the framework are still subject to judicial appeals. The retention of records, at a minimum, should be kept until the timeline to file an appeal through the Court of Kings Bench has expired.
Is there anything else you would like to add about appeals process?	
Final Thoughts	
Is there anything else you would like to add about appeals process?	• The framework does not currently address complaints or investigations during the election cycle. Given the nomination period begins January 1st of the election year, it is reasonable to consider a black-out period of the publishing of investigative reports beginning in August of the election year. ○ This would mean that complaints could still be accepted but preliminary reviews and investigation reports could not be made publicly available until after the election has concluded and results are official. ○ Consideration could also be made to increase the fee to file a complaint during an election period given the risk that complaints could be weaponized for the purposes of creating a negative narrative during the election campaign.

	• Political parties and their involvement in the process are not currently contemplated and special consideration should be made for how political parties could weaponize the framework. Including to file complaints and create a narrative during election campaigns. • As mentioned above, legislative changes should be considered to require council to impose a sanction as recommended by the investigator rather than leaving the decision to council. • The legislation does not include an informal process to resolve an alleged contravention prior to or after a complaint as been filed. Although this will not always be the case, there are instances where a contravention has occurred and the elected official is unaware. Consideration could be made to allow for the elected official to take steps to resolve the alleged contravention prior to council appointing a investigator and proceeding to the preliminary review, ultimately reducing the financial strain on municipalities. • A gap that continues to exist relates to the inability to extend the framework to council created committees. There are documented instances of council committees having issues that would fit with the councillor accountability framework but having no tools to address the concerns given restrictions of section 145(9) of the *Municipal Government Act*. We recommend legislative change to expand the framework to include council created committees or legislative changes that allow council to create policies or bylaws for council created committees that address similar contraventions as those outlined in the framework.

9.9

ROCKY VIEW COUNTY

262075 Rocky View Point
Rocky View County, AB, T4A 0X2

403-230-1401
questions@rockyview.ca
www.rockyview.ca

Thursday, July 30, 2026

Village Of Beiseker
Box 349
Beiseker, AB T0M 0G0

Re: Proposed Land Use Changes to Direct Control District 52 (Thurn #2 Pit)

The purpose of this letter is to inform you that Rocky View County is initiating the process to amend *Direct Control District 52* which governs lands identified as portions of SW-34-27-26-W04M and N-34-27-26-W04M or the "Thurn #2 Pit" are being proposed. The amendments intend to align the regulations within *Direct Control District 52* with those outlined within Rocky View County's Land Use Bylaw relating to aggregate extraction and/or processing.

Background

Direct Control District 34 (Bylaw C-4876-98) was originally approved on May 26, 1998. Since that time, two new versions of the Land Use Bylaw have been adopted. The most recent version, in 2021, had no changes to *Direct Control District 52*.

In 2025, Rocky View County Council approved components of the Aggregate Resource Plan project which included amendments made to the Municipal Development Plan and the Land Use Bylaw. As well, amendments were made to other components such as the creation of the Aggregate Development Performance Standards.

As *Direct Control District 52* refers to previous *Land Use Bylaw (C-1725-84),* the amendments made to the current Land Use Bylaw are not applicable to the lands governed by *Direct Control District 52* as currently stated.

Purpose of the Amendments

Amendments to *Direct Control District 52* are being contemplated to bring its provisions into alignment with the Current Land Use Bylaw, and the policy objectives established through the Aggregate Resource Plan project. The intent of the direction is to not alter the permitted land use designation or the fundamental nature of the aggregate extractive uses on the subject lands; rather the intent is to modernize the regulatory framework governing those uses and looks to ensure that the content of *Direct Control District 52* aligns with the County's Land Use Bylaw.

Resident Comments

As part of this process, Rocky View County staff are reaching out to landowners in proximity of the subject lands to seek any comments you may have about the current provisions of *Direct Control District 52*, or anything else you would like Rocky View County to consider as part of this review. To view the current provisions of *Direct Control District 52* please see the following URL: https://www.rockyview.ca/sites/default/files/2025-06/DC-52.pdf

Please submit any comments by email to cmaddock@rockyview.ca by **August 30, 2026**.

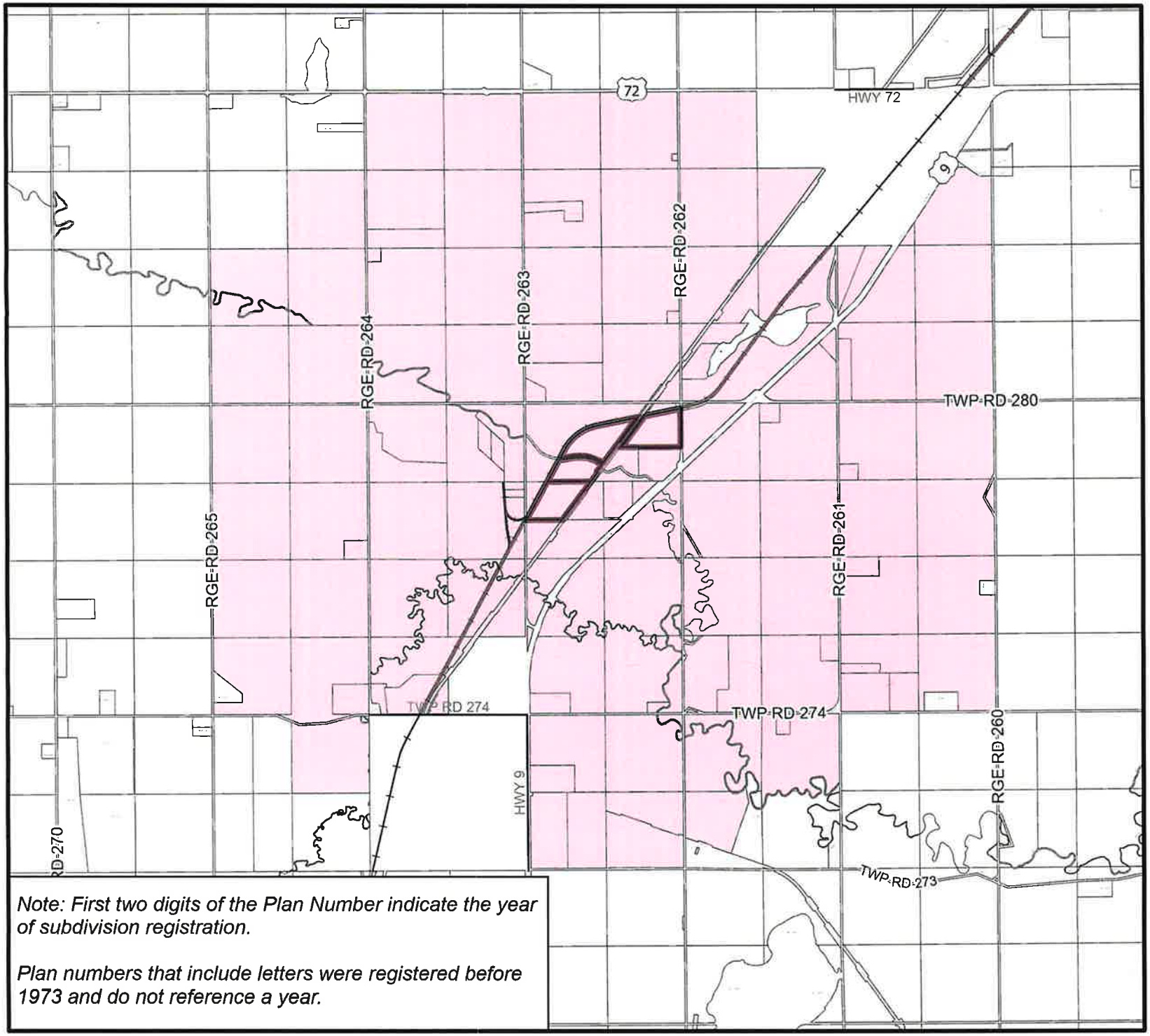

ROCKY VIEW COUNTY

Note: First two digits of the Plan Number indicate the year of subdivision registration.

Plan numbers that include letters were registered before 1973 and do not reference a year.

Division: 05
Roll: 07134005, 07134012
File:
Printed: 7/30/2026
Legal: A portion of N-34-27-26-W04M

9.h.

From: TEC Municipal Engagement <TEC.MunicipalEngagement@gov.ab.ca>
Sent: July 31, 2026 4:52 PM
Cc: TEC Municipal Engagement
Subject: Fall 2026 Alberta Municipalities Convention

Good afternoon,

I am pleased to advise there may be an opportunity to meet with the Honourable Devin Dreeshen, Minister of Transportation and Economic Corridors, during the upcoming fall 2026 Alberta Municipalities convention in Edmonton, from September 23-25, 2026.

Please **REPLY to this email by August 10, 2026,** to express your municipality's interest for a meeting. We request that you include your top three priority items for discussion along with a list of potential meeting attendees.

A response will be provided once the Minister's availability is confirmed.

Thank you,

Jessica Kalmar
Issues Manager, Office of the Assistant Deputy Minister
Construction and Maintenance Division
Transportation and Economic Corridors
Government of Alberta

Phone 587-334-3664
Jessica.Kalmar@gov.ab.ca

Alberta

Classification: Protected A

Classification: Protected A